DLR56 1200 Lumen

5"& 6" Recessed LED Downlight

Project

Date

Type

Product Description

The DLR56 from NICOR® is a 5"& 6" recessed LED downlight that is ideal for both retrofit and new construction alike.

Redesigned to boost energy efficiency, the LED light engine draws only 17 watts while improving light output to over 1200 lumens. The enriched 90+ CRI provides superior color quality, along with a greater than 60 R9 value. Not only is the light quality better, but this design improvement meets new industry standards like Title 24 and CEC making it an ideal solution.

Construction
Spun aluminum trim routes heat away from electrical components
Low profile, integrated driver, allows for use in shallow housings

Optical System
Polystyrene diffuser and reflector cone create a uniform light distribution that reduces glare without sacrificing lumen output

Electrical
Utilizes high performing LG® LEDs with greater than 90 CRI and an R9 greater than 60*
Dimmable to 10% with most standard dimmers
Thermally protected, high efficiency driver standard
Operating temperature rating of 0°F to 120°F (-18°C to 49°C)
Input voltage of 120V
Lifetime rated for greater than 60,000 hours
LM-79, LM-80 testing performed in accordance with IESNA standards.
*not available in 5000K

Finish
Available in: Black, Nickel, Oil-Rubbed Bronze and White.

Installation
Compatible with most 5" and 6" recessed housings
Quick and easy installation with a screw-in Edison base (GU24 socket string available) and torsion spring mounting system

Warranty
5-year limited system warranty standard

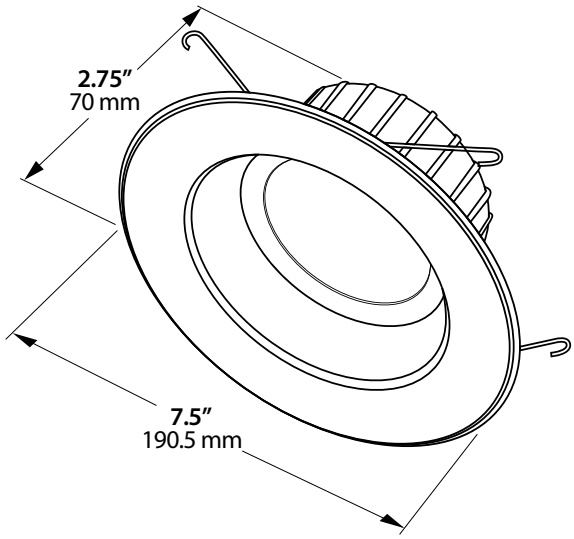

PRODUCT INFORMATION

LED Type:	LG® 5630
LED Lifetime (Hrs):	>60,000
Input Voltage (V)	120V
Power Draw (W)	17.1W
Fixture Height	2.75" (70 mm)
Trim Width:	7.5" (190 mm)

Ordering Information

Example: DLR56-2712-120-3K-WH

Series	Version	Voltage	CCT's	Trim Color
☐ **DLR56**	☐ **2712** (2.75 1200 lm)	☐ **120**	☐ **2K** (2700)	☐ **BK** (black)
			☐ **3K** (3000)	☐ **NK** (nickel)
			☐ **4K** (4000)	☐ **OB** (oil-rubbed bronze)
			☐ **5K** (5000)	☐ **WH** (white)
				☐ **WH-BF** (white baffle) Available in 2K & 3K only

NICOR, Inc. 2200 Midtown Place NE, Albuquerque, NM 87107 P: 800.821.6283 F: 800.892.8393
www.nicorlighting.com January 23, 2015 4:34 PM

Photometric Data

2700K DLR56 1200lm*

Luminaire	2700K
Input Voltage (VAC)	120
System Level Power (W)	17.1
Delivered Lumens (Lm)	1273
System Efficacy (Lm/W)	74.5
Correlated Color Temp (K)	2667
Color Rendering Index (CRI)	93 R9=60

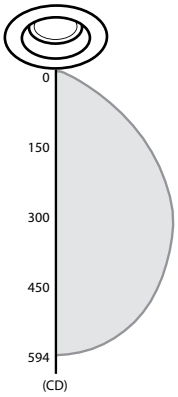

Zonal Lumen Summary**

Zone	Lumens	% of Luminaire
0-30	447	35.52%
0-40	713	56.68%
0-60	1140	90.64%
0-90	1273	100.00%
90-180	0	0.00%
0-180	1273	100.00%

Integrating sphere data
****Type C Goniophotometer data***

3000K DLR56 1200lm*

Luminaire	3000K
Input Voltage (VAC)	120
System Level Power (W)	17.1
Delivered Lumens (Lm)	1305
System Efficacy (Lm/W)	76.3
Correlated Color Temp (K)	3078
Color Rendering Index (CRI)	93 R9=66

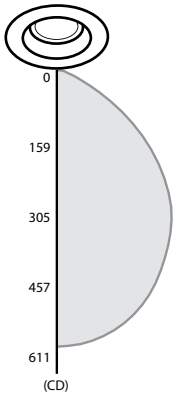

Zonal Lumen Summary**

Zone	Lumens	% of Luminaire
0-30	460	35.42%
0-40	734	56.54%
0-60	1177	90.60%
0-90	1305	100.00%
90-180	0	0.00%
0-180	1305	100.00%

Integrating sphere data
****Type C Goniophotometer data***

4000K DLR56 1200lm*

Luminaire	4000K
Input Voltage (VAC)	120
System Level Power (W)	17.1
Delivered Lumens (Lm)	1343
System Efficacy (Lm/W)	78.5
Correlated Color Temp (K)	4021
Color Rendering Index (CRI)	93 R9=65

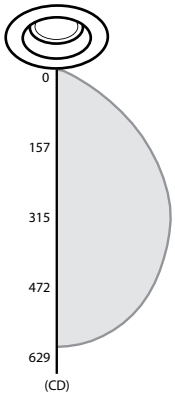

Zonal Lumen Summary**

Zone	Lumens	% of Luminaire
0-30	476	35.47%
0-40	760	56.59%
0-60	1217	90.60%
0-90	1343	100.00%
90-180	0	0.00%
0-180	1343	100.00%

Integrating sphere data
****Type C Goniophotometer data***